supremo®
LEISURE

Helpful advice before you begin: Please read carefully

- PLEASE READ THE INSTRUCTIONS THOROUGHLY BEFORE YOU COMMENCE ASSEMBLY - follow the simple step by step instructions in the correct sequence.
- Please check all components listed, are counted and corresponding to the required parts for building this product before assembling.
- This product requires 2 people to assemble this product safely to prevent parts being damaged or injury to any person.
- NEVER USE A POWER TOOL TO ASSEMBLE.
- Do not discard any packaging until you have checked that you have all the parts and all the fittings.
- To ensure your product is not damaged during assembly, prepare a suitable area to build your furniture, either assemble on a clean soft surface or use the box that the products have been supplied in. This will prevent your product from damage and scratching during the building process.
- To begin the assembly follow the diagrams in order sequence as directed to ensure the correct method is followed for correct installation of each components.
- DO NOT tighten any bolts until all parts have been connected loosely with all bolts inserted into position, once all parts are connected then each bolt can be fully tightened using the tools provided.
- Do not use any other tools other than those recommended to build this product.
- Keep parts, fittings and packaging away from children.
- In the unlikely event this product has missing or damaged parts, please email our customer service department **help@supremouk.com**

IMPORTANT

PLEASE KEEP THIS BOOKLET FOR FUTURE REFERENCE. CONTAINS IMPORTANT INFORMATION REGARDING THE CARE AND USE OF YOUR SUPREMO PRODUCT

For Your Safety

- This product may only be used for its intended purpose as furniture for residential properties.
- Check all components regularly for correct function, damaged and loose connections especially at the start of the season and at 1-2 months intervals dependent on use.
- Damaged components may endanger your safety or affect the quality of the product. Replace all damaged parts immediately. Use only spare parts provided by Supremo Leisure. Should you wish to purchase spare parts, please contact **help@supremouk.com**
- Supremo Leisure will not be responsible for damage caused by improper use.

supremo®

LEISURE

Assembly Instruction

General Round Table

Part List:

NO.	Picture	Name	Qty
A		Table Top	1
B		Leg Panel	2
C		Side Panel	2
D	M6x20	Bolt	4
F	M6x30	Bolt	8
G		Nut	8
H		Metal Washer	20
I		Plastic cap	12
J		Glass	1
K		Reducer Plug	1
L		Allen key	1
M		Hex Wrench	1
N		Plastic Washer	8

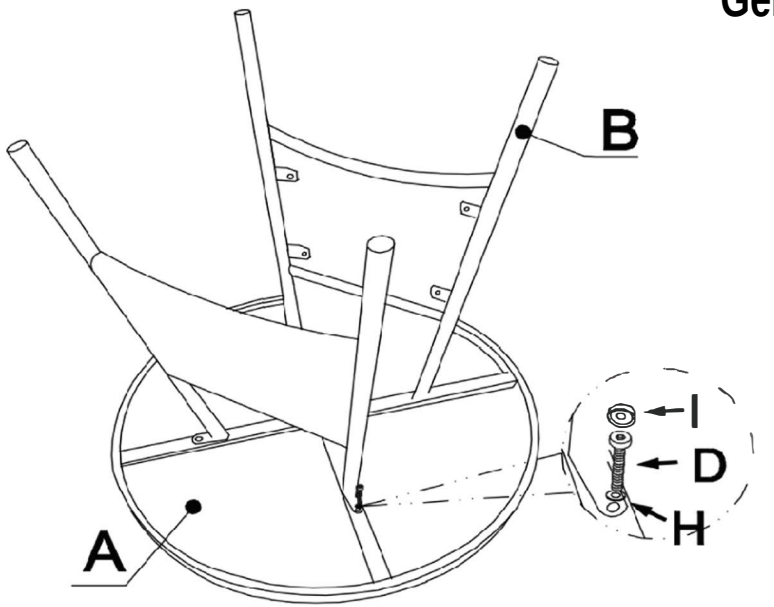

Step 1. The table top is placed facing down on a soft surface, Attached the legs panel (x 2) to the table top.

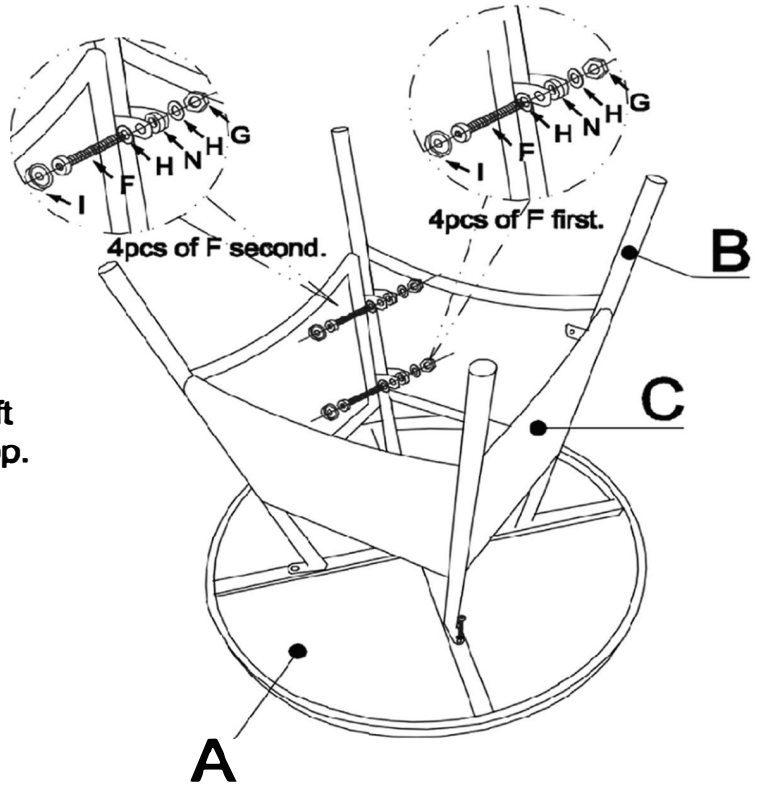

Step 2. Attached the Side Panels to the leg panels.

supremo®
LEISURE

Assembly Instruction

General Round Table

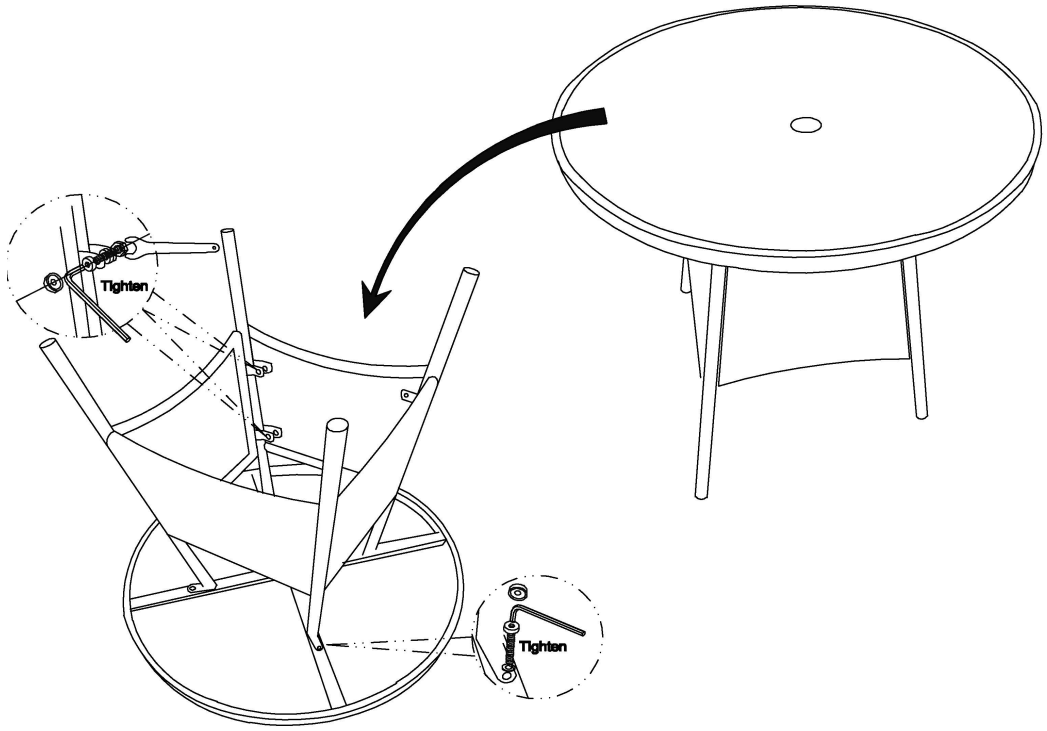

Step 3. Turn table onto legs to check table is level before fully tightening, when satisfied table is level, fully tighten all bolts using the tools provided.

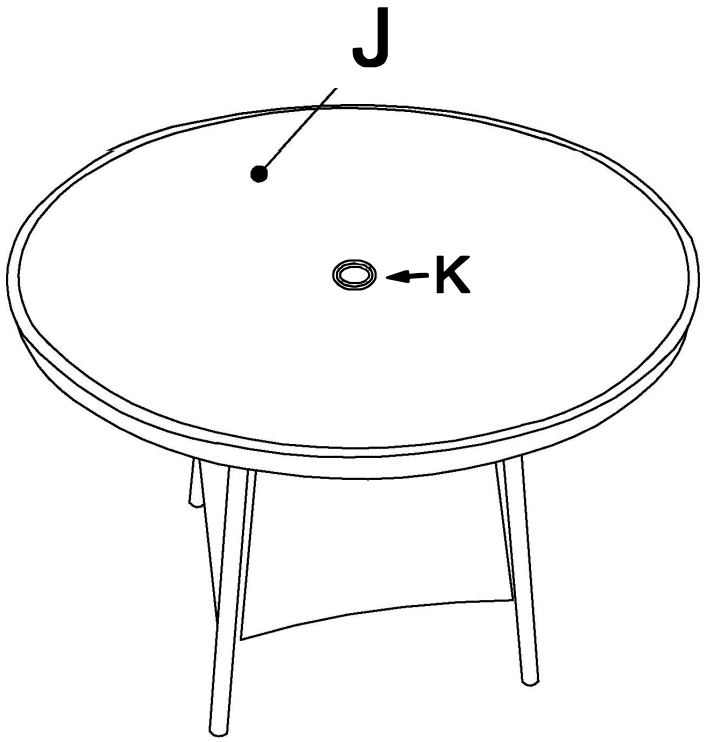

Step 4. Finally place the glass plate onto the table top, slide the parasol protector ring through the centre hole of the table and attach the back nut from the underside of the table.